YB09589-2	Door Style:	V106	Finished Left:	-	Cabinet Type:	SPECIAL
	Door Material:	CLEAR ALDER	Finished Right:	-	Dwr Front Type:	-
#1	Case Material:	5/8PB	Finished Top:	YES	Dwr Box Type:	-
	Inside Material:	NMM	Finished Bottom:	YES	Hinge:	-
Qty=3	Base Type:	-	Finished Interior:	-	Edge Profile:	-

- FLOATING SHELF w/MITERED CORNERS
- WINE BOTTLE SADDLE ATTACH TO FLOATING SHELF
- NO PROFILING

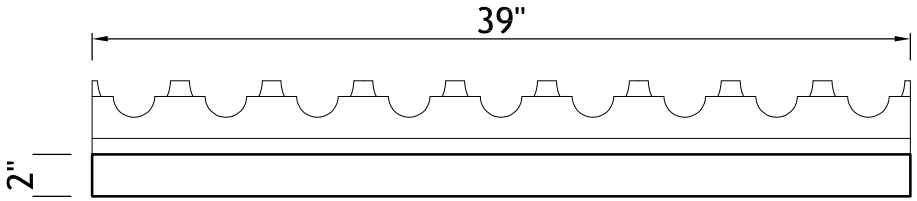

FRONT VIEW

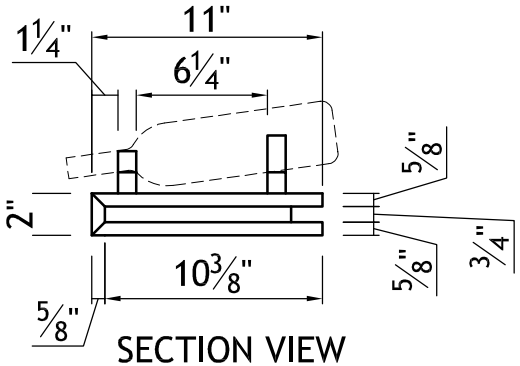

SECTION VIEW

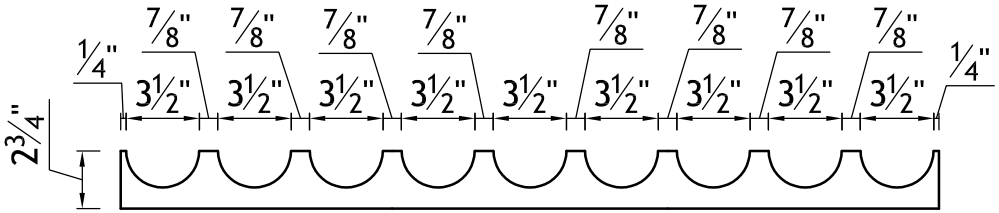

BACK SADDLE DETAIL

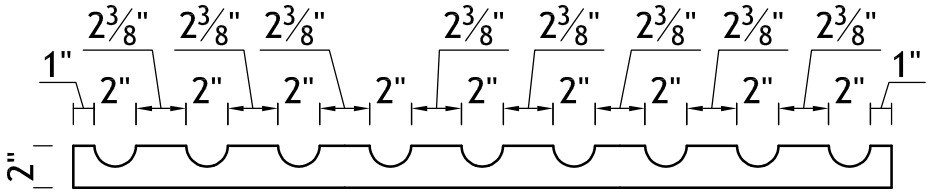

FRONT SADDLE DETAIL

DECOR CABINET COMPANY
No. 200 Route 100 Box 2110
Morden, MB, R6M 1B8
Phone (204)822-6151
Fax (204)822-6856

File:	Date Created:	Drawn By:	Revisions:	Drawn By:	Drawing #:	Dealer Signoff:
o:\autocad\drawings_yb drawings\yb09589.dwg	10/30/2023	kn	11/6/2023	knaguit	1 of 1	