YB07207-2	Door Style:	P1-67-67-3"S&R	Finished Left:	YES	Cabinet Type:	SPECIAL
	Door Material:	WALNUT	Finished Right:	YES	Dwr Front Type:	-
#9	Case Material:	5/8PB	Finished Top:	-	Dwr Box Type:	-
	Inside Material:	NMM	Finished Bottom:	-	Hinge:	-
Qty=1	Base Type:	-	Finished Interior:	YES	Edge Profile:	-

- CUSTOM ISLAND SHELF
- FINISHED INTERIOR
- NO PROFILLING ON SHELVES OR POSTS

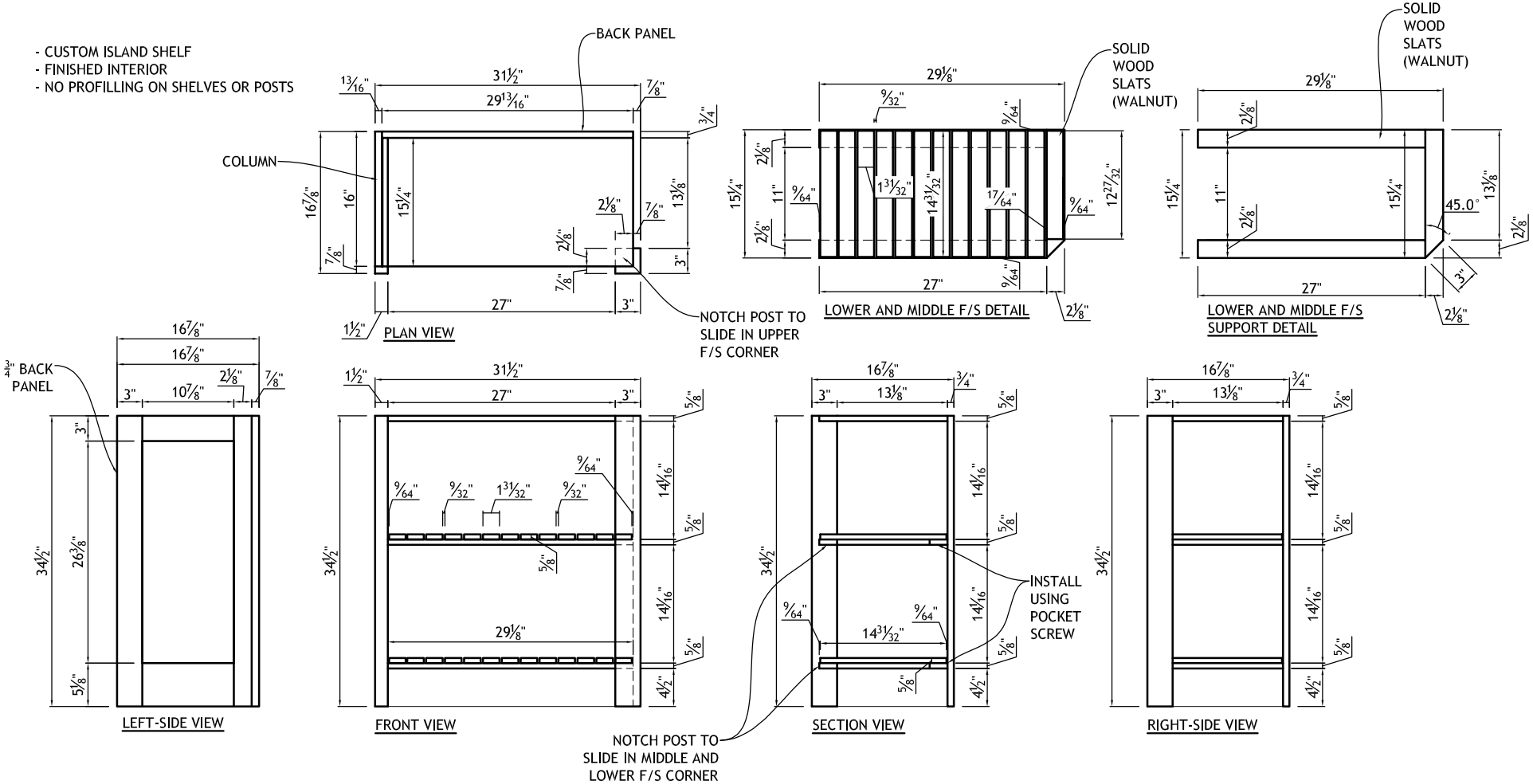

DECOR CABINET COMPANY
No. 200 Route 100 Box 2110
Morden, MB, R6M 1B8
Phone (204)822-6151
Fax (204)822-6856

File:	Date Created:	Drawn By:	Revisions:	Drawn By:	Drawing #:	Dealer Signoff:
o:\autocad\drawings_yb drawings\yb07207.dwg	8/25/2023	kn	10/19/2023	knaguit	1 of 1	