YB10718-2	Door Style:	100	Finished Left:	-	Cabinet Type:	BSP
	Door Material:	MELAMINE	Finished Right:	-	Dwr Front Type:	-
ITEM #6	Case Material:	5/8PB	Finished Top:	-	Dwr Box Type:	LEGRA POS
	Inside Material:	CANADIAN GREY	Finished Bottom:	--	Hinge:	RIGHT
Qty=1	Base Type:	LEGS	Finished Interior:	-	Edge Profile:	G

HARDWARE ITEM NUMBER:
CA-SHV-RASMLHDSC

- BASE HIDE-A-SHELF CABINET
- 1 $\frac{1}{4}$" THICK SPACER/SUPPORT RAIL (2 PCS $\frac{5}{8}$" BANDED ON FRONT & BOTTOM)

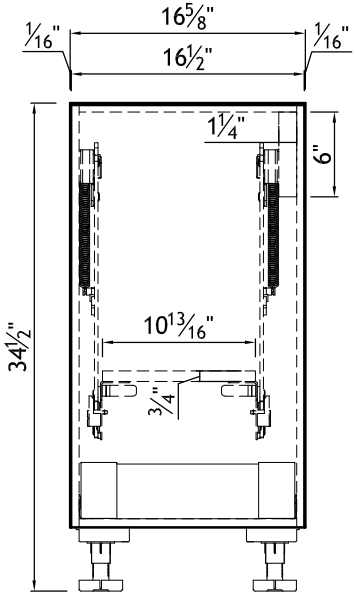

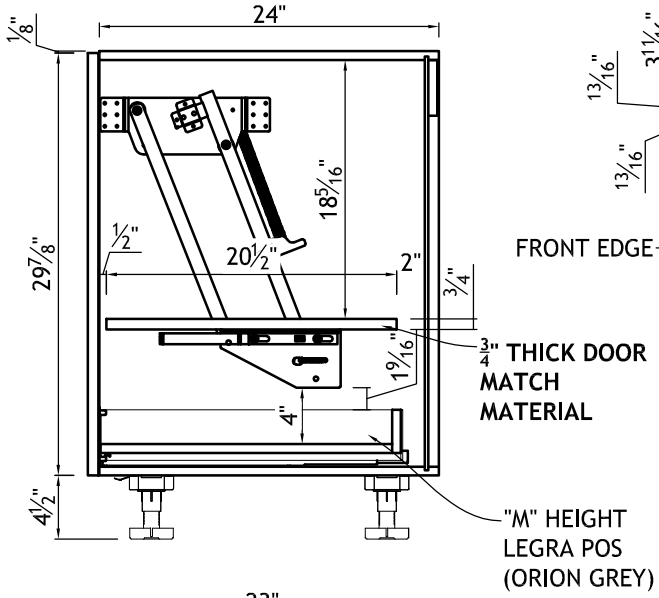

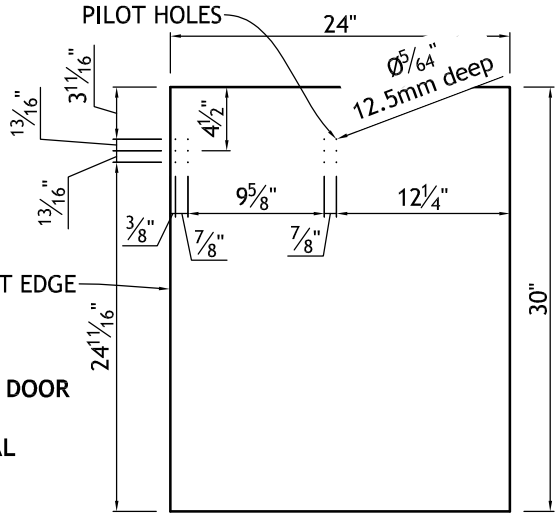

LEFT SIDE DRILLING DETAIL

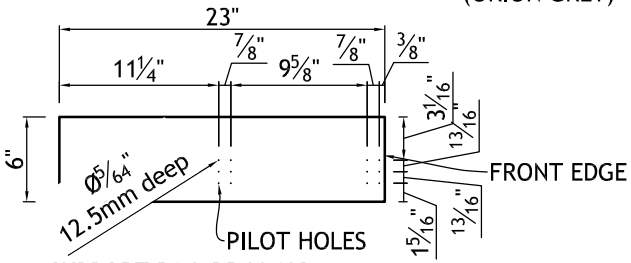

SUPPORT RAIL DRILLING

- 1 $\frac{1}{4}$" THICK (2 PCS OF $\frac{5}{8}$" BANDED FRONT AND BOTTOM

DECOR CABINET COMPANY
No. 200 Route 100 Box 2110
Morden, MB, R6M 1B8
Phone (204)822-6151
Fax (204)822-6856

File:	Date Created:	Drawn By:	Revisions:	Drawn By:	Drawing #:	Dealer Signoff:
o:\autocad\drawings_yb drawings\yb10718.dwg	12/8/2023	djw	1/30/2024	dwar	1 of 1	