YB10727A-1	Door Style:	P1-73-73-2.25"S&R	Finished Left:	YES	Cabinet Type:	VSP
	Door Material:	MAPLE PAINT	Finished Right:	YES	Dwr Front Type:	-
ITEM# 9	Case Material:	5/8PB	Finished Top:	-	Dwr Box Type:	-
	Inside Material:	NMM	Finished Bottom:	-	Hinge:	-
Qty=1	Base Type:	-	Finished Interior:	-	Edge Profile:	D

OUTSOURCE HARDWARE:

- DOCKING DRAWER CANISTER #0024-00505 (1X)
- DOCKING DRAWER CANISTER #0024-00503 (1X)
- DOCKING DRAWER CANISTER #0024-00502 (1X)
- BAIN MARIE BIN FROM RUSSELL HENDRIX #30942 (1X)

- SINK BASE CABINET 1 U-SHAPED DRAWER 1 FALSE FRONT
- INSTALL ORGANIZING BINS IN DRAWER #1

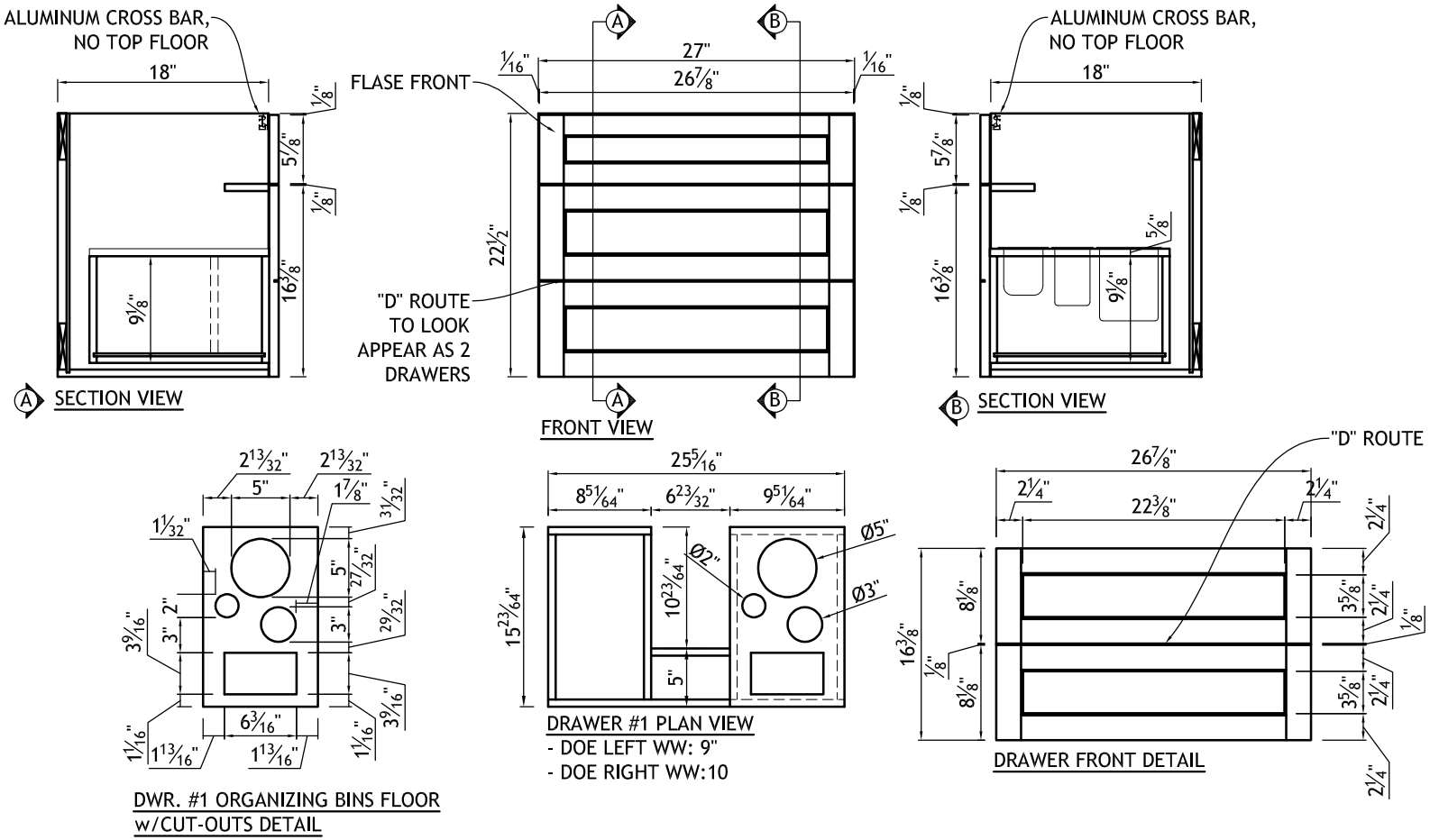

DECOR CABINET COMPANY — No. 200 Route 100 Box 2110, Morden, MB, R6M 1B8, Phone (204)822-6151, Fax (204)822-6856	File: o:\autocad\drawings_yb drawings\yb10727.dwg	Date Created: 12/11/2023 — Drawn By: ja	Revisions: 12/13/20 23 — Drawn By: jalerta	Drawing #: 1 of 1	Dealer Signoff: